Date: May 14, 2026 10:15 am

FLARE-CNR-BKT

Corner Mounting Bracket

Description

The FLARE corner bracket is designed to allow the FLARE LED floodlight to be installed in corner mounted positions. Powder coated protection offers a more durable finishing option that provides both protection and aesthetic appeal to its metal surface. Durability: Powder-coated surfaces are resistant to chipping, scratching, fading, and other types of wear. The coating provides enhanced protection against corrosion, chemicals, and UV exposure.

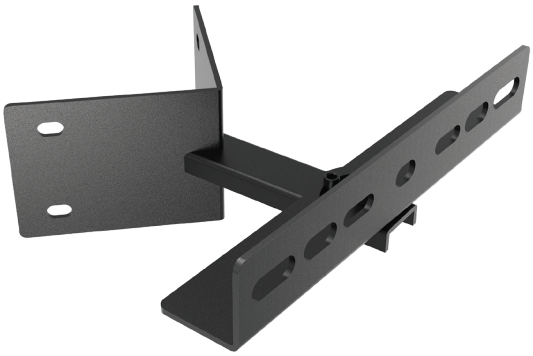
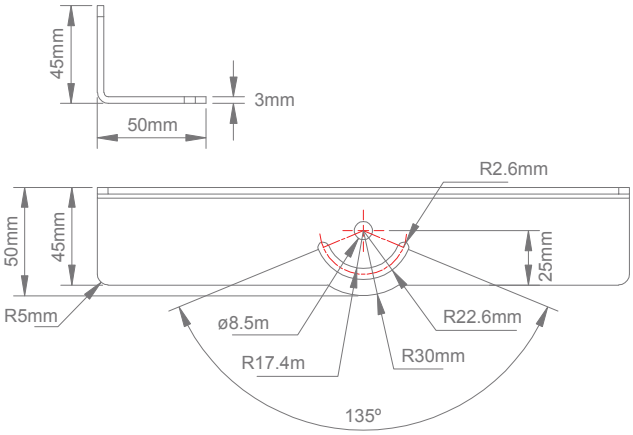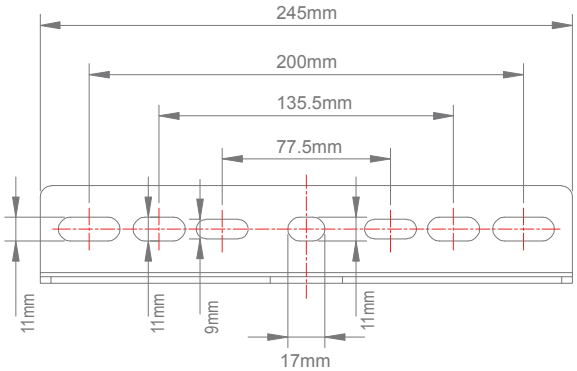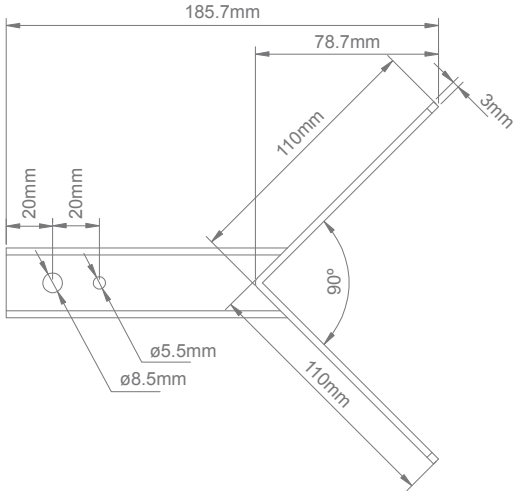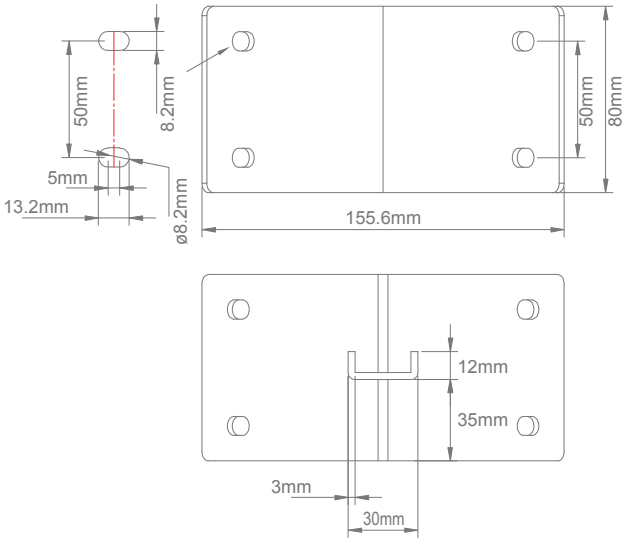
Item No.	Variant
FLARE-CNR-BKT	19288