Date: November 10, 2025 9:03 am

Blaze-Pro-24V-100

24V DC Low Voltage LED Floodlight

Replacement 3yr Warranty | VDC 24 | IP Rating 66 | IK Rating 08

Description

The BLAZE-PRO Series of LED Floodlights offer a sleek and stylish design, as well as an array of specialised features such as improved condensation prevention technology along with helping to reduce stock inventory. Featuring an aluminium fascia design with frosted glass lens to soften glare, IP66 rating and a unique anti-condensation breathing valve which stops unwanted condensation build-up behind the glass lens. The Multi-wattage selector switch offers the flexibility of selecting the right light output for the application within the same fitting. The tri-colour selector switch also offers the convenience of choosing between a 3000K Warm White, 4000K Neutral White or 5500K White colour temperature options. Angle installation bracket for ease of installation. Ideal for BBQ areas, outdoor entertaining areas, and backyard lighting. Only available in black. Backed by a 3 Year Replacement Warranty.

Specification Features

Input Voltage:	24V DC - LED Driver Required*
Power:	100W
IP rating:	IP66
Lumens:	Warm White 3000K - 11490lm
	Neutral White 4000K - 12194lm
	White 5500K - 11666lm
LED type:	SMD
CCT:	3000K - 4000K - 5500K
Luminous Efficacy:	110lm/W
CRI:	≥70
Beam angle:	120°
Dimmable:	No
Lifespan:	20,000 hrs
Driver:	DOB (driver on board)
Surge Protection:	4.5KV
Sensor:	Built-in Sensor Adaptor Interface
Cable:	Frosted Glass Anti-Condensation Breathing Valve
Accessories:	26cm Spike (Included)
	50cm Spike (Sold Separately)

**24V DC Constant Voltage LED Driver Required - Wire in Parallel*

Driver Required 24V DC

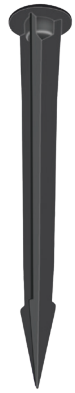

26cm spike

Diagrams / Additional

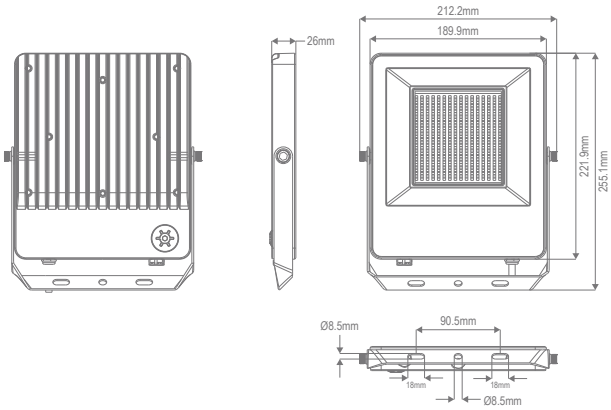

Item No.	Variant	CCT
BLAZE-PRO-24V-100	19910	TRIO
BLAZE-PRO-24V-ACC	19912	N/A

Domus 29-31 Richland Street. Kingsgrove NSW 2208 | Phone: 1300 236 687 | email: enquiries@domuslighting.com.au

Specification subject to change without prior notice.